Collecting and Preserving Insects

COLLECTING and preserving insects is an ideal way to learn about them, and can be an interesting hobby. It provides the satisfaction of learning at first hand, and enables the collector to discover things about insects that he might not learn from books. It also provides material for the study of structural details that serve as identification characters. There are few restrictions against collecting insects compared to those for collecting other animals or plants. The average landowner has no objection to insect collecting on his property, and it is only in a few places such as parks where collecting may be restricted. Insects are so abundant that ordinary collecting has little or no effect on their numbers; the student of insects need not worry that his collecting activities will upset the balance of nature.

When and Where to Look for Insects

Insects occur almost everywhere, and the more places you examine the more kinds of insects you are likely to find. Insects are small and live in small habitats; different species may often be found only a few inches or a few feet apart. If you know where to look, you can find at least some insects virtually any time, but collecting will be more profitable from spring to fall than in the winter. Different insects are active at different times of the year, hence collecting throughout the year will yield a wider range of insects than collecting for only a part of the year.

You can begin your collecting at home, where you may find insects on pets, or infesting food, clothing, and other materials. On warm evenings outdoor insects are attracted to porch lights and windows of lighted rooms.

A good place outdoors to look for insects is on plants; each plant will attract certain species. Other insects occur in various concealed situations, such as in leaf litter or debris, under stones or other objects, in fungi, under bark, in dead logs, in decaying materials, and in the ground. Many insects live in water, either throughout their lives or during their immature stages, and may be found in different parts of specialized aquatic habitats. Adults of insects occurring in water only during their immature stages are usually found near water.

Collecting Equipment and How to Use It

The minimum equipment necessary to collect insects consists of your hands and a container for the insects collected. Certain tools are very helpful, nonetheless. For general collecting they include a net, killing jars, vials of preservative, envelopes, and small boxes; other tools are useful in some types of collecting. A pair of forceps is excellent for handling insects, as is a hand lens for examining them. Many of these items can be carried in a shoulder bag; the forceps and hand lens can be carried on a string around your neck.

The Net. A net for general collecting should be light and strong and have a fairly open mesh so that it can be swung easily and an insect can be seen through it. The size may depend on your personal preference, but most nets have a handle 2½ to 3 ft. long and a rim about 1 ft. in diameter; the bag should be about twice as long as the diameter of the rim, and rounded at the bottom. Marquisette, scrim, bobbinet, and bolting cloth are good materials for the bag, which should have a heavier material, such as muslin, around the rim. A fine-mesh bolting cloth is probably the best material for the bag of a net that will be used primarily for sweeping.

Insect nets can be purchased from a supply house (prices ranging upward from a few dollars) or they can be homemade; homemade nets cost considerably less. An insect net can be made with a broom handle or similar stick, a wire for the rim, and a cloth bag, as shown in the illustration on the next page. If you prefer a net that can be taken apart and carried inconspicuously, use the frame of a fish-landing net, which you can buy from a sporting-goods store.

An insect net can be used in 2 general ways: you may look for an insect and swing at it or you may simply swing the net through vegetation. The first method requires a certain amount of speed and skill, especially for active or fast-flying insects. The second method, usually called "sweeping," can yield a considerable quantity and variety of small insects.

Insects caught in a net can be removed in various ways. Take care to prevent their escaping before you take them out of the net. Remove them with as little resultant damage as possible and — in the case of insects that bite or sting — without injury to yourself. You can keep an active insect from escaping by quickly turning the net handle to fold the bag over the rim.

Most insects can be removed from a net by grasping them through the net with the fingers. Small or fragile insects, easily damaged by this method, can be removed in these ways: (1) by inserting a box or bottle into the net and getting the insect directly into this container; (2) by working the insect into a fold of the net and placing this fold into a killing jar to stun the insect; or (3) by removing the insect with an aspirator (see p. 9). The first method is the one used by many collectors to remove butterflies or moths

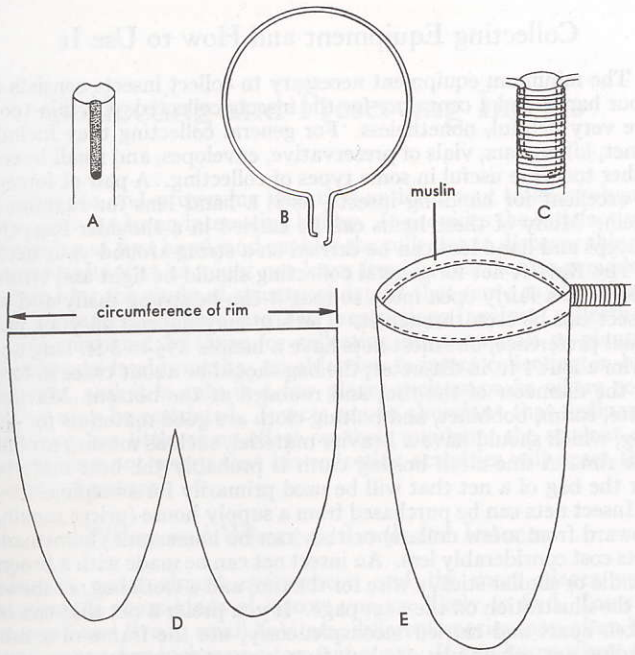

The homemade insect net. Cut grooves on opposite sides of one end of handle, as shown in A, 1 to about 2 in. from end and the other to about 3 in. from end; drill a hole about halfway through handle at end of each groove. Bend wire for rim (about No. 8 gauge) as shown in B, fit into holes and grooves, and fasten it there with fine wire or heavy cord (C). Cut material for bag as shown in D and sew. Completed bag, with muslin around rim, is shown in E.

from a net, since direct handling of the specimen often causes some of the scales to be rubbed off. If a butterfly or moth is grasped by the fingers through the net, grasp it by the body not the wings, and stun it by pinching the thorax before putting it into a killing jar (to reduce fluttering and wing damage in the jar).

Many beginners may be reluctant to grasp an insect for fear that it might bite or sting; such is much less likely than most people believe. An insect that bites does so by moving its jaws sideways and pinching or by piercing with the beak. Very few pinching insects are capable of causing pain or breaking the skin, and those that can are generally very large insects. Most biting insects are unable to bite if grasped firmly by the sides of the body.

An insect that stings does so with a structure at the posterior end of the body — usually quite readily. The only stinging insects are the bees, wasps, and some of the ants, and females alone can sting. Many flies and a few other insects strongly resemble bees or wasps but are quite harmless. If an insect in a net is one that might sting, remove it from the net in one of three ways: (1) put a fold of the net containing the insect into a killing jar until the insect is stunned (or pour an anesthetic such as chloroform over the fold of the net to stun the insect); (2) grasp the insect through the net with forceps and remove it; or (3) work the insect into a fold of the net, stun it by pinching the thorax, and then remove it. The third method is the simplest and quickest.

Insects caught by sweeping can be removed by shaking them to the bottom of the net and stunning them by the first method described above.

Killing Jars. Insects can be studied alive with considerable interest and profit, but it is well to kill and preserve a few. The characters that differentiate insects can be studied best in preserved specimens, and insect collections can be both attractive and instructive.

Killing jars are of various sizes and shapes, depending on the use they will receive. It is advisable to have 2 or more jars in the field, for insects of different types. Wide-mouthed jars are preferable to narrow-mouthed ones, and glass jars should be reinforced with tape to reduce the hazards of breakage. Several materials can be used as killing agents, but the best are probably ethyl acetate and cyanide. Ethyl acetate is a much safer material to use than cyanide, but does not kill as quickly, and jars made with it must be recharged frequently; specimens killed by ethyl acetate are usually more relaxed than those killed by cyanide, and less likely to be discolored. Cyanide jars last much longer, and are quite safe to use if certain precautions are observed. Most collectors prefer to use killing jars made with cyanide.

Ethyl acetate (an ingredient of nail polish) is a clear liquid, and its fumes act as the killing agent. Jars made with it must contain something absorptive. Cotton or cloth can be used as the absorbent material, but plaster of paris is better. Pour a mixture of plaster of paris and water into the jar and allow it to set and dry; then place a few eyedroppers of the acetate on the plaster (which absorbs it), and the bottle is ready for use. Take care not to put in too much acetate, because wet insects make poor specimens. Add more ethyl acetate every few days.

Cyanide jars can be made with calcium, sodium, or potassium cyanide. Calcium cyanide is a dark gray powder often used as a fumigant and ordinarily is obtained from a store that sells insecticides. Sodium cyanide comes in the form of balls about an inch in diameter, which must be crushed before use in a killing jar; it is obtained from a company dealing in insecticides or chemicals.

Potassium cyanide (which looks like sugar) is usually available at a drugstore. The toxic agent in a cyanide jar is hydrogen cyanide, an extremely poisonous gas given off by the action of moisture on the cyanide. Calcium cyanide releases this gas very rapidly, and is perhaps the most dangerous type of cyanide to use; jars made with it ordinarily last only a month or two. Sodium and potassium cyanides give off the gas less rapidly and are less dangerous to use; jars made with them may last a year or more. Cyanide jars are easy to make but we recommend that the beginner not attempt to make his own. He can ask someone experienced in handling cyanide to make them for him or else buy them from a supply house.

The chief hazard in the use of cyanide jars is not so much the gas given off (which is toxic if inhaled in quantity) as the possibility of a broken jar and a cut hand. This hazard can be greatly reduced by covering the bottom part of the jar with adhesive, masking, or electric tape. *All* killing jars should be so taped, and all should be conspicuously labeled POISON.

Other materials that can be used in a killing jar are carbon tetrachloride and chloroform. Carbon tetrachloride is the easier to obtain but is more dangerous. A killing jar made with either of these materials (which are liquids) is made in the same way as an ethyl acetate jar, and must be recharged frequently.

The efficiency of a killing jar depends to a large extent on how it is used. Never leave it open any longer than necessary. The hazard of an open jar, even one made with cyanide, is not very great, but the escaping gas reduces the strength of the jar. Keep the inside of the jar dry. Moisture from the insects or from the plaster sometimes condenses on the sides, particularly if the jar is exposed to bright sunlight. Moisture can be reduced by keeping a few pieces of cleansing tissue in the jar. When butterflies or moths are put into a jar, many of their scales come off and remain there; other insects put into this jar will become covered with the scales and look dusty. It is advisable to have a special jar for butterflies and moths and put other insects into different jars. All killing jars should be wiped out occasionally.

The time required for a killing jar to kill an insect depends on both the jar and the insect, and may vary considerably. Insects can be left in an ethyl acetate jar for long periods without damage, but if left too long in a cyanide jar they may become discolored. Remove insects from a jar within an hour or two after they are killed.

Specimens removed from a killing jar in the field may be stored temporarily in small boxes or envelopes; the boxes should contain some pieces of cleansing tissue. Letter envelopes, or triangular ones (see illus. opp.), are better for insects with small bodies and large wings (butterflies, moths, dragonflies, etc.). Place the specimen in the envelope with the wings together above the body and write collecting data on the outside of the envelope.

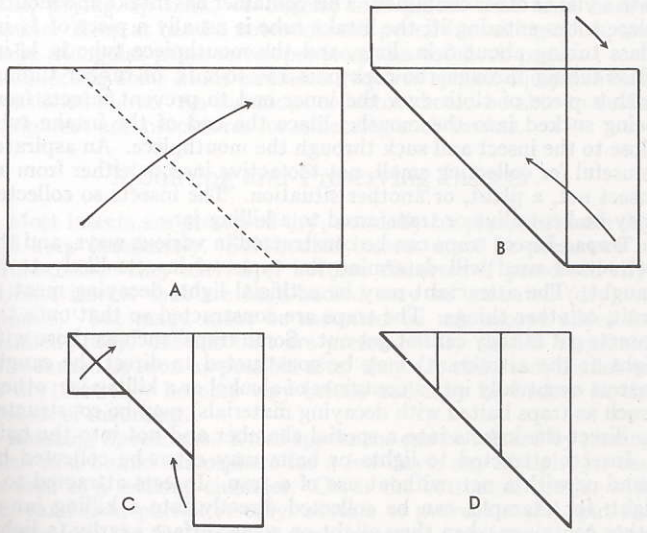

A triangular paper envelope, made by folding a piece of paper as shown in A, B, and C to form the completed envelope (D).

Beating. Many insects that occur on plants "play dead" and drop off the plant when it is jarred. You can collect such insects by placing a net or sheet under the plant and beating the plant with a stick. An insect net does not provide much collecting area. A better device is a sheet of white cloth about a yard square, held spread out by two slender pieces of wood along the diagonals of the cloth.

Sifters. Insects occurring in leaf litter or debris are most easily collected by some kind of sifting device. The simplest procedure is to shake a handful of the debris onto a sheet or cloth. Small animals present will be detected by their movement and can be picked up with forceps, an aspirator, or a wet brush. A more efficient method is to use a Berlese funnel, a large funnel with a circular piece of screen or hardware cloth in it. The material to be sifted is placed in the funnel on the screen, the funnel is held upright with a ringstand or other support, and a container (usually of alcohol) is placed below the funnel. As the material dries (this can be hastened by a light bulb over the material) the insects move downward, and eventually go into the container below the funnel. Generally it takes a few hours to get most of the insects out of the material by this method.

Aspirator. An aspirator is a device with which insects are sucked

into a vial or other container. This container has intake and mouthpiece tubes entering it; the intake tube is usually a piece of ¼-in. glass tubing about 6 in. long, and the mouthpiece tube is ¼-in. glass tubing through the cork plus 1½ to 2 ft. of rubber tubing, with a piece of cloth over the inner end to prevent insects from being sucked into the mouth. Place the end of the intake tube close to the insect and suck through the mouthpiece. An aspirator is useful for collecting small, not too active insects, either from an insect net, a plant, or another situation. The insects so collected may be kept alive or transferred to a killing jar.

Traps. Insect traps can be constructed in various ways, and the attractant used will determine the types of insects likely to be caught. The attractant may be artificial light, decaying meat or fruit, or other things. The traps are constructed so that once the insects get in they cannot get out. Some traps (such as those with light as the attractant) may be constructed to direct the caught insects eventually into a container of alcohol or a killing jar; others (such as traps baited with decaying materials) may be constructed to direct the insects into a special chamber and not into the bait.

Insects attracted to lights or baits may often be collected by hand or with a net, without use of a trap. Insects attracted to a light, for example, can be collected directly into a killing jar or other container when they alight on some surface nearby (a light-colored wall or sheet). Thus you can collect only those specimens in which you are particularly interested.

Aquatic Collecting Equipment. Many aquatic insects can be collected by hand or with forceps from objects in the water; more can be collected with a net or other device. An aquatic net should be much sturdier than an aerial net, with a bag no deeper than the diameter of the rim. Kitchen strainers 4 to 6 in. in diameter make good dip nets.

If a dip net or strainer comes up full of mud and debris, the insects taken may be difficult to see unless they move. To locate them, dump the net contents into a white-bottomed pan of water. Insects are easily seen against this white background, and can be removed by hand, forceps, or eyedropper. Small free-swimming forms like mosquito larvae are best collected with a long-handled white enameled dipper, in which the insects similarly show up well. Remove them with an eyedropper.

Other Equipment and Methods. Many insects can be collected directly into a killing jar or other container, without the use of a net. This is the simplest way to collect insects that alight on a flat surface and do not fly too readily, and many insects on flowers. Various types of buildings often serve as insect traps; insects fly in and alight on the walls or ceiling and remain there, or they alight on windows — from which they can be collected directly into a jar.

A heavy knife is useful for cutting into logs or branches, opening galls, prying up bark, or digging into places that may harbor insects. Keep at hand a notebook and pencil for taking notes, and make triangular paper envelopes from the notebook pages.

Collecting some kinds of insects requires special equipment not mentioned above. An ingenious collector should be able to devise equipment and procedures for collecting such insects.

Mounting and Preserving Insects

Most insects are preserved dry, normally on pins, and once dry will keep indefinitely. Soft-bodied insects must be preserved in liquids, since they shrivel or become distorted if preserved dry. Minute insects that are hard-bodied may be mounted (dry) on "points," but many must be mounted on microscope slides for detailed study. Insects that are preserved dry should be pinned or mounted as soon as possible after they are collected; if allowed to dry first they become very brittle and may be broken in the process of mounting.

Relaxing Specimens. Dried specimens can be relaxed by placing them in a humid atmosphere for a few days; any airtight jar can be used as a relaxing chamber. Cover the bottom of the jar with wet sand (add phenol or ethyl acetate to prevent mold), put the insects into the jar in small open boxes or envelopes, and close the jar.

Pinning. Insects sufficiently hard-bodied to retain their shape when dry, and big enough to pin, are normally preserved by pinning. Common pins are too thick and too short, and they rust; insects should be pinned with *insect pins*, made especially for this purpose, which can be bought from a supply house. They are available in various sizes (thicknesses). The best sizes for general use are Nos. 1 (very slender), 2 (less slender), and 3 (thicker, for larger insects).

Most insects are pinned vertically through the thorax; a few are pinned sideways. Beetles and hoppers are pinned through the front part of the right wing, at a point where the pin on emerging from the underside of the body will not damage a leg. Bugs are pinned through the scutellum (p. 33) if it is large enough to take a pin or through the right wing, as for beetles. Grasshoppers and crickets are pinned through the rear edge of the pronotum, just to the right of the midline. A treehopper is pinned through the pronotum just to the right of the midline. Dragonflies and damselflies can be pinned vertically through the thorax with the wings horizontal, but it is better to pin them sideways, left side up, with the wings together above the body, the pin going through the thorax below the wing bases. If the wings are not together when the specimen is removed from the killing jar, place the specimen in an envelope (the wings together above the body) for a day or two until it has dried enough for the wings to stay in this position; then pin it.

The simplest way to pin an insect is to hold it between the thumb and forefinger of one hand and insert the pin with the other hand. All specimens and labels put on a pin should be at a uniform height; this is most easily accomplished with a pinning block.

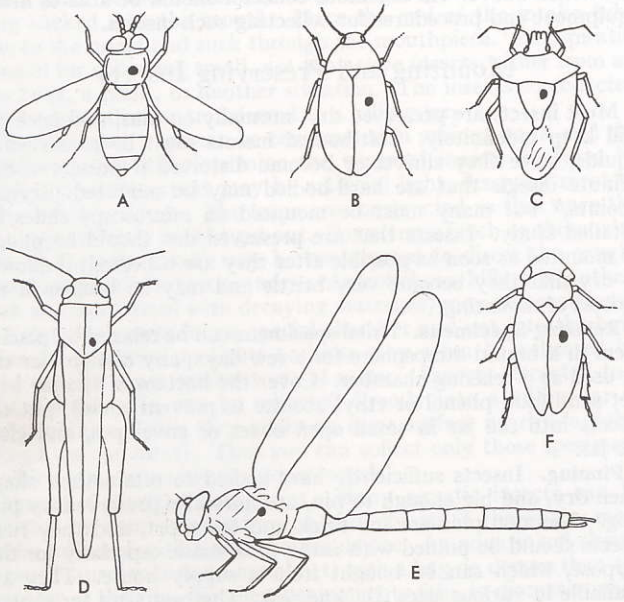

How insects are pinned. The black spots show the location of the pin in the case of flies (A), beetles (B), bugs (C), grasshoppers (D), dragonflies and damselflies (E), and leafhoppers, froghoppers, and planthoppers (F).

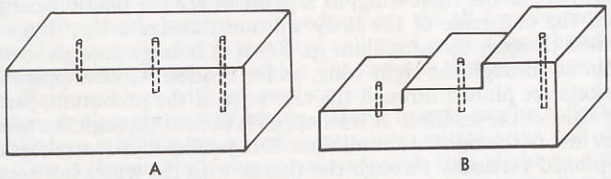

Pinning blocks. These may be made of a rectangular piece of wood (A) or one shaped like steps (B), with holes drilled to 1, 5/8, and 3/8 in. After placing a specimen on a pin, insert the pin in the 1-in. hole until it touches bottom. The 5/8-in. hole is used to position the locality-date label on the pin, and the 3/8-in. hole to position a second label, if there is one.

Mount the insect about an inch up on the pin. With large-bodied insects there should be enough of the pin above the insect to permit easy handling.

Sagging of the abdomen of a pinned insect (like a dragonfly) can be prevented in the following ways: (1) by sticking the pinned specimen onto a vertical surface, with the abdomen hanging down, and leaving it there until the abdomen dries; or (2) by placing a small piece of cardboard on the pin, just under and supporting the insect, and leaving it there until the insect dries; or (3) by supporting the sagging abdomen with crossed pins, the abdomen resting in the angle where the pins cross.

A sheet of cork, balsa wood, or other soft material is useful for the temporary storage of pinned specimens until they can be sorted and placed in boxes.

Mounting Small Insects on Pins. Insects hard-bodied enough to mount dry but too small to pin are usually mounted on "points." Points are small triangular pieces of cardboard, about 8 mm. long and 3 or 4 mm. wide at the base; the pin is put through the base of the point and the insect is glued to the tip. Points can be cut with scissors or punched out with a special punch (obtainable from a supply house), or they can be purchased from a supply house.

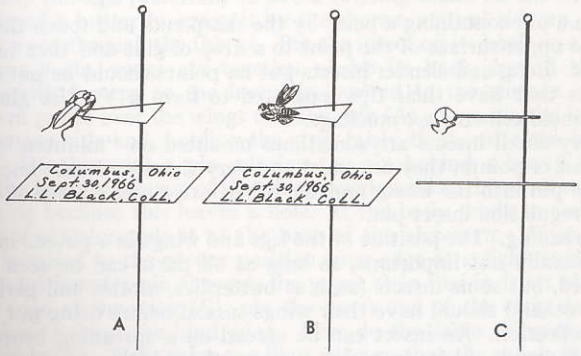

Mounting small insects on points. A, beetle, dorsal side up; B, fly, left side up; C, beetle mounted dorsal side up, attached by its side to the bent-down tip of the point.

Insects put on points should be glued so that the body parts to be examined in identifying the insect are not obscured. The best position for an insect is on its right side, with the head away from the pin (B, above). Flat insects that may be difficult to mount on their side are usually mounted dorsal side up at the extreme tip of the point.

Place an insect that is to be put on a point at the edge of a block,

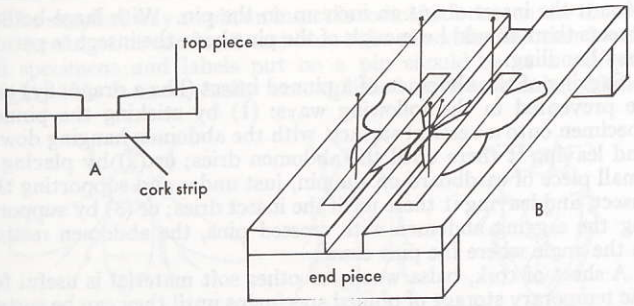

A spreading board. A, cross section showing relation of cork strip to groove in center of board; B, a board containing a spread specimen. Supply-house boards are generally 12 in. long and 4 to 6 in. wide; the top pieces are $\frac{3}{8}$ in. thick at the inner edge and $\frac{1}{2}$ in. thick at the outer edge. The center groove may be $\frac{1}{4}$ to $\frac{1}{2}$ in. or more wide, depending on the size of the insects to be spread on it; the width of this groove is adjustable in some supply-house boards. The top pieces should be of wood soft enough to take a pin easily.

grasp a pin containing a point by the sharp end, and touch the tip of the upper surface of the point to a drop of glue and then to the insect. Long and slender insects put on points should be put on 2 points that have their tips separated to form a V. Use glue or household cement, *not* mucilage.

Very small insects are sometimes mounted on "minuten" pins instead of points; they are short and very slender. Insert one end of the pin into the insect and the other into a small piece of cork on a regulation insect pin.

Spreading. The position of the legs and wings in a pinned insect is generally not important, as long as all parts can be seen and studied, but some insects (such as butterflies, moths, and perhaps some others) should have their wings spread before being put into the collection. An insect can be spread on a spreading board or spread upside down on a flat surface; the position of the wings depends on the type of insect. A spreading board (see illustration above), which can be bought from a supply house or can be home-made, is used for specimens going into a pinned collection. The specimens are usually spread dorsal side up. An insect to be mounted under glass, as in a Riker or glass mount (see pp. 19–20), is spread on any flat surface soft enough to take an insect pin and placed in an upside-down position. The spreading process consists of placing the wings in a standard position and fastening them there (with strips of paper), and leaving them to dry in that position.

The wings of a butterfly, moth, or other insect in which the front wings are more or less triangular are spread with the hind margin

of the front wings at right angles to the body, and the hind wings far enough forward so that there is no large gap at the side between the front and hind wings (see illustrations of such insects in this book). In grasshoppers, damselflies, dragonflies, and other insects whose front wings are elongate rather than triangular, the wings are generally spread with the front edge of the hind wing at a right angle to the body and with the front wings far enough forward to just clear the hind wings. The front and hind wings of a butterfly, moth, or mayfly overlap at the base, with the front edge of the hind wing under the rear edge of the front wing, and should be so overlapped when spread. The front and hind wings of most other insects are not overlapped when spread.

For the beginner and those interested primarily in mounting a few large or showy insects for display, we recommend spreading the insect in an upside-down position and mounting it under glass; spreading is easier this way, and does not require a special spreading board. For the more advanced student, or anyone planning to specialize in insects that are normally spread, we recommend the use of a spreading board.

The steps in spreading a butterfly in an upside-down position are illustrated on p. 16. Butterflies and moths must be handled carefully (forceps preferred) to avoid rubbing scales off the wings. To spread a butterfly, grasp it by the thorax, ventral side up, and insert a pin through the thorax. Pin the insect on its back on a flat surface; if the wings are together above its back, spread them apart with forceps as the insect is lowered to the surface. Pin strips of paper over the wings on each side (A). Remove the lower pin on one side and, holding the strip fairly tight, raise the front wing. Do this with a pin, placing the pin behind a heavy vein near the front basal part of the wing; avoid pushing the pin through the wing because this leaves a hole. If the body tends to swivel, insert a pin alongside it at the base of the abdomen. When the wing is raised to the proper position (rear edge at a right angle to the body) insert a pin through the paper strip just in front of the front edge of the wing (B); pin the lower end of the strip down, anywhere behind the hind wing. Now do the same thing on the other side (C). Next raise one hind wing so that the notch at the side between the two wings is reduced, and pin the paper strip just behind the rear edge of the hind wing (D). Repeat the process on the other side (E). Next orient the antennae to a symmetrical position and hold them in place by pins placed alongside them (E). Now hold the body down with forceps at the pin through the body, and carefully remove this pin (F). If the legs project upward very far fasten them close to the body with a strip of paper across the entire specimen, at right angles to the body. Data on when and where the specimen was collected should be noted beside it, this information accompanying the specimen when it is later put into the collection.

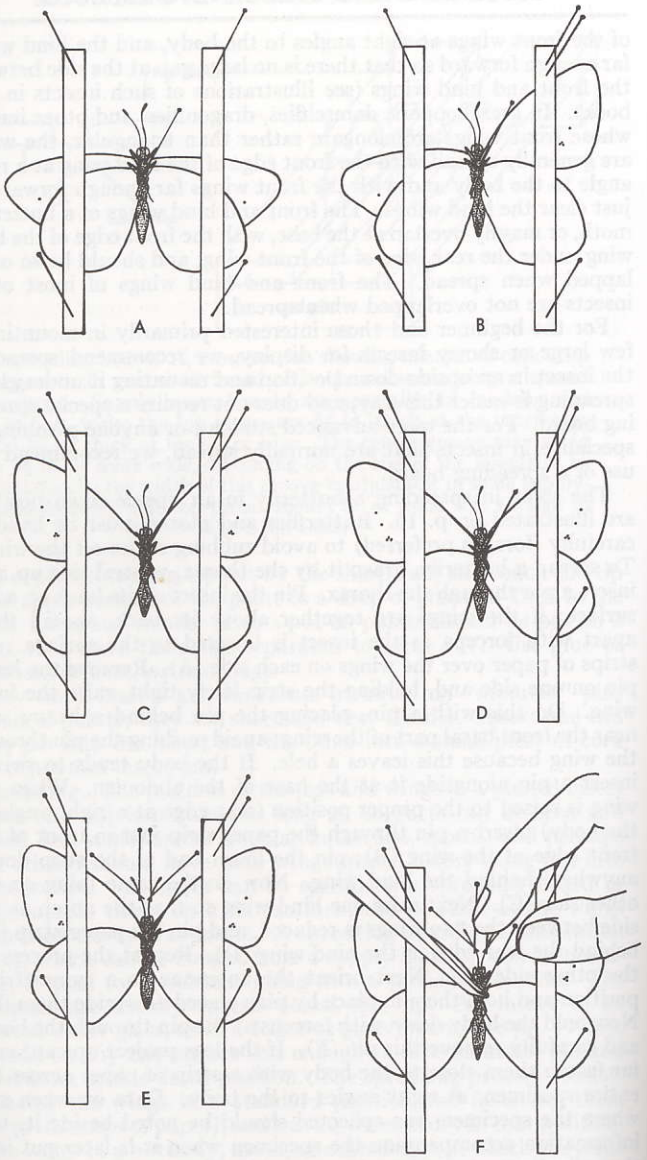

Steps in spreading a butterfly.

The time required for a spread specimen to dry will vary with its size and with temperature and humidity. A large butterfly or moth that might take several days to dry at normal room conditions can be dried in an hour or two with heat — in an oven or under an electric light. To determine if the specimen is dry, touch the abdomen gently with a pin; if the body is stiff the specimen is dry, but if the abdomen is still flexible the specimen is not yet dry.

A specimen spread on a spreading board is spread the same way, except that the insect is pinned through the thorax from above and placed at the standard height on the pin. The pinned specimen is then placed on the board, the pin going into (perhaps through) the cork strip at the bottom of the groove, until the base of the wings is even with the upper surface of the top piece of the board. Next the wings are spread and fastened down and the antennae oriented to a symmetrical position. Do not remove the pin in the insect's body after the spreading.

Mounting on Slides. Small insects, particularly soft-bodied forms that shrivel when preserved dry, and various insect parts (genitalia, wings, mouth parts, etc.) are often mounted on slides for detailed study. Insects and parts that are thick or dark-colored are usually cleared (made translucent) before mounting. Then they are mounted on microscope slides in some type of mounting medium (like Canada balsam). Such mounting involves treatment of the specimen with various reagents. Consult technical books for an explanation of the process.

Insect wings can be mounted on slides (preferably 2 x 2 in., which can be projected) without any mounting medium. If the wings are not folded they can be broken off a dried specimen, placed on a 2 x 2 slide and oriented, another slide put on top, and the slides taped together. Such a slide is permanent, and can be made in a few minutes. A folded wing must be relaxed and unfolded before it is mounted. This is done by putting the wing in alcohol or a special relaxing solution. The flattened wings are allowed to dry before the other slide is added. The wings of butterflies and moths can be mounted this way, but cannot be projected unless the scales are bleached or removed; directions for doing this are given on p. 221.

Preservation in Envelopes. Use envelopes for the permanent preservation of slender and relatively fragile insects such as dragonflies, damselflies, and crane flies. This method saves considerable space compared to mounting on pins, and the specimens are less apt to be broken (or if they are, the parts are not lost). The simplest type of envelope is a triangular one (see p. 9), labeled on the outside. If clear plastic envelopes are used, it is possible to study the specimens without removing them from the envelope. Labeling for specimens in plastic envelopes can be done on a white card (same size as the envelope) placed inside with the specimen.

Preservation in Fluids. Larvae, nymphs, and soft-bodied adults

are usually preserved in fluids, since they shrivel when preserved dry. The best preservative is a 75–80 percent solution of ethyl alcohol. Alcohol is a killing agent for most insects but is unsatisfactory for killing larvae — it may distort or discolor them. Larvae should be killed by hot water or chemicals. A good killing solution for larvae is one containing 1 part of kerosene, 7–10 parts of 95 percent ethyl alcohol (less for very soft-bodied larvae), 2 parts of glacial acetic acid, and 1 part of dioxane. Isopropyl alcohol (rubbing alcohol) will serve if ethyl alcohol is not available.

Containers of specimens preserved in alcohol should be completely filled with alcohol and tightly stoppered to reduce or prevent evaporation. If a large number of specimens are killed in a small amount of alcohol, this alcohol should be replaced after a day or two. Rubber stoppers are better than cork ones. Periodically inspect containers of specimens in fluid and replace any evaporated fluid.

Arrangement and Care of the Collection

Labeling. All specimens should be labeled with at least the locality and date of their capture — specimens without such labels are of little value. The name of the collector and in some cases information on the habitat or food of the specimen are also helpful. For pinned insects put this information on one or two small pieces of paper on the pin below the insect; for specimens mounted on slides put it on a slide label, and on a piece of paper (in pencil or waterproof ink) placed inside the container for specimens preserved in fluid.

Labels on pinned specimens should be on fairly stiff white paper no larger than about ¼ x ¾ in. (or smaller), at a uniform height on the pin (achieved with a pinning block) and parallel with the insect (or point). Locality labels may be handwritten or printed. Printed labels can be obtained from a supply house or cut from a photograph of a sheet of typewritten labels. The locality given should indicate the capture site as closely as possible. The county may be sufficient in some cases, but if the county is large list the town or other site. Place these labels on the pins in the same way

Columbus Co.	Columbus Co.	Columbus Co.	Columbus Co.
Columbus Co.	Columbus Co.	Columbus Co.	Columbus Co.
Columbus Co.	Columbus Co.	Columbus Co.	Columbus Co.
Columbus Co.	Columbus Co.	Columbus Co.	Columbus Co.

A

Lincoln Co., Me.	Lincoln Co., Me.	Lincoln Co., Me.
D.J. Borror	D.J. Borror	D.J. Borror
Lincoln Co., Me.	Lincoln Co., Me.	Lincoln Co., Me.
D.J. Borror	D.J. Borror	D.J. Borror
Lincoln Co., Me.	Lincoln Co., Me.	Lincoln Co., Me.
D.J. Borror	D.J. Borror	D.J. Borror

B

Sheets of locality labels, actual size, with locality alone (A) or locality and collector (B), each label with a space for writing in the date.

throughout the collection — whether they are read from the right or left is a matter of personal preference.

An insect collection should contain some identification labels. How these are best arranged will depend on the size of the collection and the extent to which it is identified. Most collections should be labeled at least to order and family, and the specimens so arranged that a single label can serve for all the specimens in a group. When specimens are labeled to species, an identification label is placed on each specimen or on the first in a group. This label is a plain piece of paper (about an inch square and at the base of the pin) containing the scientific name of the insect, the name of the person identifying it, and the date (month and year) the identification was made.

Boxes for Pinned Insects. Pinned insects are kept in boxes having a soft material in the bottom to permit easy pinning; they can be obtained from a supply house or be homemade. The most common supply-house type is a Schmitt box, a wooden box about 9 x 12 x 2½ in. with a tight-fitting lid and the bottom lined with sheet cork or similar material. Such boxes cost from a few to several dollars. Similar boxes made of heavy cardboard are available from supply houses and cost one half to one third as much. Homemade boxes may be made of wood or heavy cardboard, and the bottom lined with sheet cork, balsa wood, Styrofoam, or corrugated cardboard. The material in the bottom should fit tightly, and if corrugated cardboard is used it should be soft enough to take an insect pin. Large collections may be housed in Schmitt boxes, or in cabinets containing trays or drawers constructed like Schmitt boxes.

Riker Mounts. A Riker mount is a glass-topped box containing cotton, with insects on the cotton just under the glass. Insects spread for mounting in a Riker mount are spread in the upside-down position described on p. 15. Riker mounts may be of various sizes, and also can be purchased from a supply house or be home-

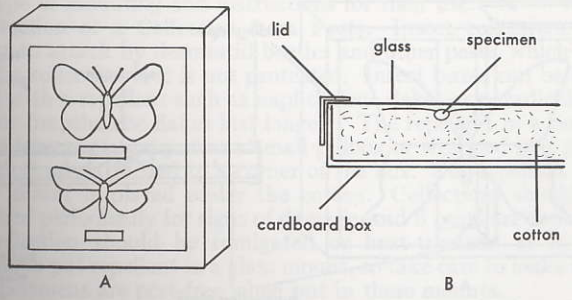

The Riker mount. A, a completed mount; B, sectional view showing a specimen in place under the glass.

made. Homemade boxes can be made from a cardboard box, a piece of glass cut to fit inside the lid, and binding tape. The box should be about an inch deep; cut deeper boxes down to this depth. Cut out a section of the lid, leaving about a ⅜-in. margin around the edge. Covering the lid with tape will improve its appearance. Fasten the glass inside the lid with strips of tape placed so that they do not show from the outside. If you want to hang up the mount put 2 brass fasteners on the bottom and reinforce them inside with tape, then tie a string or wire between them on the outside. Before putting a thick-bodied insect into a Riker mount, tease the cotton to make a small depression for the body. Fasten the lid on the mount with pins or tape.

Specimens in Riker mounts are easily displayed, and the mounts can take considerable handling without damage to the specimens. A repellent can be placed under the cotton to protect the specimens from pests. Riker mounts have 2 disadvantages: only 1 side of the specimen can be seen and many moths will fade after prolonged exposure to light.

Glass Mounts. Glass mounts are similar to Riker mounts, but have glass on both top and bottom and contain no cotton; both sides of the specimen(s) are visible. They generally contain only one or a few specimens, and can be made in various ways. The following procedure is relatively simple:

1. Spread specimen in an upside-down position and fasten legs close to the body.
2. Cut 2 identical pieces of glass for top and bottom of the mount, allowing a margin of at least ¼ in. on all 4 sides of the specimen(s).
3. Cut enough supporting glass to provide room for body of the insect. These pieces will be as long as 1 dimension (usually the shorter) of top and bottom pieces, and a width that will leave a

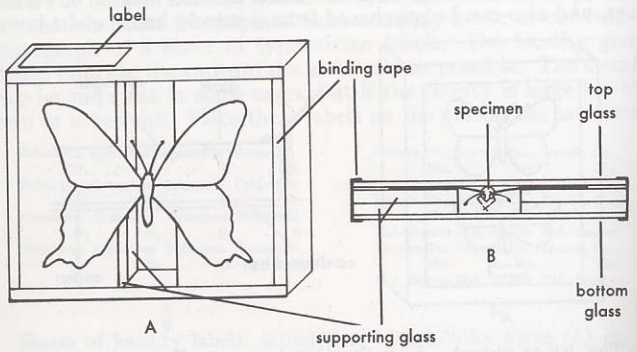

A glass mount. A, the finished mount; B, sectional view.

space in center of the mount 2 or 3 times as wide as body of the insect.

4. Clean the glass thoroughly, preferably with a glass cleaner; use a brush to remove lint from the glass.
5. Fasten the pieces of supporting glass to bottom piece with a small drop of cement (such as Duco household cement) on each outside corner; press each supporting piece into position, in line with the edges of bottom glass; remove any excess cement. Allow time for cement on one piece to set before the next piece is added.
6. When the supporting glass is in position, place specimen on the supporting pieces and center it. Put a small drop of cement on the 4 outer corners, then put on the top glass, being careful not to move the specimen. Press this glass down hard and put a small weight on it; leave the weight in place until cement sets (an hour or more).
7. Tape edges of the mount with slide-binding or electric tape; this covers any sharp edges of the glass, and gives the mount a finished look. The label is placed as shown.

Glass mounts are inexpensive, easy to make, and they provide a safe and attractive method for storage and display. If specimens put into these mounts are heat dried or otherwise made pest-free before mounting, they should remain pest-free. Two or more specimens can be put in a single mount by placing one above the other, or side by side (with 3 groups of supporting glass). The use of standard sizes will simplify glass cutting and mount storage.

Plastic Mounts. Plastic mounts may consist of 2 sheets of thick plastic with the insect mounted between them, or a plastic block in which the insect is embedded. If 2 sheets are used, each is bulged out where the insect's body will be, the 2 sheets are put together with the insect between them, and sealed around the edge with acetone or tape. Embedding an insect in a block of plastic is a rather involved process, but the final product is an attractive, durable, and permanent mount. Supply houses offer materials for this type of mounting and instructions for their use.

Protection of a Collection from Pests. Insect collections are subject to attack by dermestid beetles and other pests, which will ruin the collection if it is not protected. Insect boxes can be protected with a repellent such as naphthalene flakes or paradichlorobenzene (napthalene flakes last longer). The repellent in a box of pinned insects can be put in a small pillbox or wrapped in a piece of cloth firmly attached to a corner of the box. The repellent in a Riker mount is placed under the cotton. Collections should be examined periodically for signs of damage, and if pests are detected the collection should be fumigated or heat-treated. It is not possible to put repellent in a glass mount, so take care to make sure that specimens are pest-free when put in these mounts.

Handling Specimens. Insects are very brittle when dry. Careless handling of a pinned specimen can result in the loss of legs,

antennae, or other parts. Broken-off parts often can be replaced by use of glue or cement. Experience (and accidental damaging of prize specimens) will impress on the collector the importance of care in handling mounted specimens.

Supply Houses

Much of the equipment necessary for making an insect collection can be homemade or purchased in local stores, but some items must be obtained from a supply house. A few of the leading supply houses are:

Bio Metal Associates, 316 Washington St., El Segundo, Calif. 90245. Eastern office: BioQuip East, 1115 Rolling Rd., Baltimore, Md. 21228. Western office: BioQuip West, P.O. Box 61, Santa Monica, Calif. 90406

Carolina Biological Supply Co., Burlington, N.C. 27216

General Biological Supply House, Inc., 8200 S. Hoyne Ave., Chicago, Ill. 60620

Powell Laboratories, Gladstone, Oregon 97027

Ward's Natural Science Establishment, Inc., P.O. Box 1712, Rochester, N.Y. 14603

Ward's of California, P.O. Box 1749, Monterey, Calif. 93942.

Work with Living Insects

THE STUDENT of insects who does nothing but collect, kill, and mount these animals and study the dead specimens will miss the most interesting part of insect study. Anyone who takes time to study *living* insects will find that they are fascinating and often amazing little animals. They can be studied in the field or in captivity. Many are very easy to keep in captivity, where they can be studied more easily and at closer range than in the field.

Some collectors try to catch an insect as soon as they see it. We suggest that you occasionally stop and watch an insect awhile before you try to collect it. In the case of fast-flying insects such as dragonflies, you will probably not be able to catch one the instant you see it and may be compelled to watch. This may try your patience, but in observing it you may learn things about its habits that you would not learn if you caught it immediately.

If insects are kept in captivity a short period and released (or put into the collection), they require only simple containers and relatively little care. If collected in immature stages and kept until the adults appear, they require more care and sometimes special containers. If cultures are maintained throughout one or more generations, special containers and even more attention are necessary.

Field Observations

You can insect-watch much as you might bird-watch — by going into the field and keeping your eyes and ears open. A binocular is seldom needed, as for bird-watching, except occasionally for such insects as dragonflies. A hand lens, however, is very helpful.

A pond is an excellent place for watching insects. it probably has water striders and whirligig beetles moving about on its surface, various beetles, bugs, and other insects in shallow water where they can be watched from shore, and dragonflies, damselflies, and other insects flying or resting near or over the pond. Brief observation of the dragonflies, for example, will reveal that each species has a definite zone (height) of flight above the water surface, each flies and rests in a characteristic manner, and each has a particular method of laying eggs, flying in tandem, and chasing other individuals. An observer will discover that some of the larger dragonflies patrol definite territories; they will attempt to mate with any female of their species entering this territory,

and will engage in characteristic dances or chases with other males of their species that enter the territory. An examination of the vegetation around the edge of a pond may reveal nymphs transforming into adults. This process — the adult emerging from the nymphal skin and expanding — takes from one-half hour to an hour, and at the right season it is not difficult to find emerging individuals.

Another good place to watch insects is at flowers. Many insects occur there, and although some of them are fairly small they can usually be observed at close range. Observation of the bees will reveal the basis of the expression "busy as a bee"; a butterfly may be seen uncoiling its proboscis and extending it down into the flower; and the sunlight striking the wings of a hovering syrphid fly will make it look like a small jewel. Some animals occurring on flowers are predators, and feed not on the flower but on the bees and flies that visit it. If you observe a flower containing a crab spider or an ambush bug for a while, you might see either animal catch its prey, and you will be surprised at how large an insect it can catch. The observant insect-watcher will see many instances of one animal eating another.

Ants are very interesting insects, especially at or near their nest, or on plants in association with aphids. The ground around a large mound nest may be almost alive with ants coming or going, perhaps carrying something. If a stone or board is lifted and an ant nest under it is exposed, the ants will busily transport their young to the shelter of their underground burrows. A few ants are often found around a large cluster of aphids on a plant; if you observe these for a time you may see the ants feeding on a watery fluid (honeydew) that issues from the end of the aphid's abdomen.

A plant selected at random and examined carefully will seldom fail to have some insects on it, and there are likely to be many kinds — each on a particular part of the plant and behaving in a characteristic fashion. The plant may also contain the eggs, larvae, or pupae of many types of insects.

If you visit a site at fairly regular intervals you may be able to follow the seasonal history and development of the insects there. The development of a wasp nest, galls, leaf miners, the activities of a group of webworms or tent caterpillars, or the development of the insects in a fallen log can be followed by such observations.

Keeping Insects in Captivity

Cages. There are many types of containers to use as insect cages. A few simple types are illustrated opposite (especially A–D). An insect can be kept for a time in an empty container (A or B), but it will generally live longer if something like natural conditions are provided.

Plants supplied as food must be kept fresh or regularly replaced.

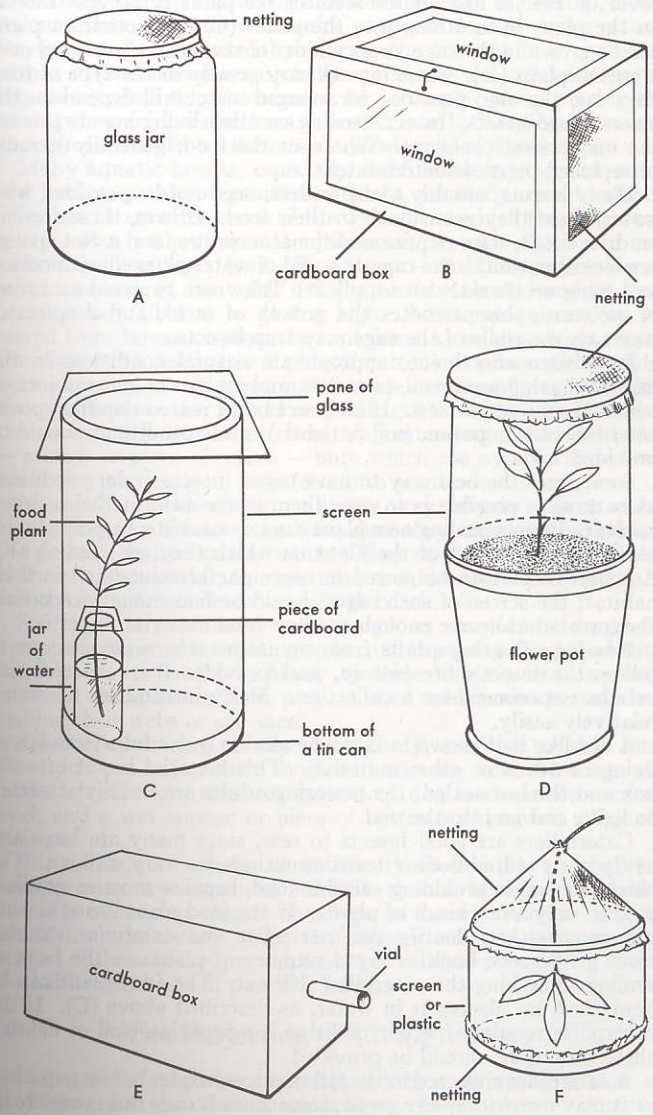

Cages for insects.

They can be kept fresh longer if placed in a jar of water, with a cover on the jar around the stem of the plant to prevent insects on the plant from falling into the water (C). Sometimes a plant can be grown in the cage, or a cylinder of screen can be placed over a potted plant (D). Since insects vary greatly in the type of food they eat, the kind provided for a caged insect will depend on the insect's food habits. Insects feeding on other living insects present the major food problems. Whatever the food, generally it must be replaced before it deteriorates.

Many insects, notably plant feeders, need not be provided with water, since they get enough in their food. Others, those feeding on drier foods, may require additional moisture, and a wet sponge or piece of cotton in the cage or a vial of water plugged with cotton and lying on its side can supply it. Take care to avoid an excess of moisture; this promotes the growth of mold, and droplets of water on the walls of the cage may trap insects.

It is often effective to approximate natural conditions in the cage by having sand, soil, or stones, and a plant or some object on which the insect can rest. If an insect being reared requires special conditions for pupation (soil or debris), these conditions should be provided.

Sometimes the best way to have caged insects under conditions as natural as possible is to cage them in the field in their normal habitat. Insects feeding on a plant can be caged in a bag or cylinder placed over the part of the plant on which they are feeding (F). Aquatic insects can be reared in cages partly submerged in their habitat; the screen of such cages should be fine enough to contain the insects but coarse enough to allow food material to get in.

Rearing. Rearing adults from immature stages enables one to follow the insect's life history, and provides the collector with excellent specimens for a collection. Many insects can be reared relatively easily.

A box like that shown in E can be used to rear adults from larvae living in debris or other materials. This material is put into the box and the box sealed; the emerging adults are usually attracted to light, and go into the vial.

Caterpillars are good insects to rear, since many are large and easily observed, and their transformations are very striking. The chief problem is providing suitable food, because most caterpillars feed on only a few kinds of plants. If the food plant is not known, you must either identify the caterpillar and determine its food from a reference book or try a number of plants in the hope of finding something the caterpillar will eat. The food plant can be kept fresh by placing it in water, as described above (C). If the caterpillar requires special condition for pupation (soil or debris), these conditions should be provided.

A caterpillar collected in the fall may overwinter before pupating, or it may overwinter as a pupa; sometimes it may not complete its development unless it is subjected to low temperatures. Cocoons collected in the fall and brought indoors may fail to develop, either because they dry out or require exposure to low temperature. Drying can be prevented by placing the cocoons in a container with a little soil and occasionally sprinkling the soil with water. Exposure to low temperature can be accomplished by placing the cocoons in a refrigerator for a few weeks, or by keeping them outdoors (for example, on the outside windowsill of a room).

Many aquatic insects, especially those living in stagnant water and feeding on microorganisms or debris, are easily reared indoors. They can be reared in some of the water from which they were collected, often without special equipment to aerate the water and without adding more food. If a stream-inhabiting insect is put into an aquarium, the water usually must be aerated and its temperature not allowed to go too high. Adult mosquitoes can be reared from larvae or pupae in containers as small as vials; cover the vials (with netting or a plug of cotton) to prevent the adults from escaping. Predaceous insects such as dragonfly or damselfly nymphs require other insects or small aquatic animals as food, and the aquarium must contain something extending out of the water — a stick or piece of screen — onto which the nymphs can climb when they are ready to transform into adults.

Meal-infesting insects generally are very easy to rear or maintain from generation to generation, since they normally live indoors and do not require extra moisture. They can be kept in containers of their food material; this material should be sifted at intervals, and the insects transferred to a fresh batch.

Spiders, and predaceous insects such as mantids or dragonfly nymphs, will prove interesting to keep in captivity if supplied with suitable insects as food. Many of these animals have unusual methods of capturing their prey. Caged spiders can be watched making their webs or egg sacs.

Adult crickets sing readily in captivity, and live a fairly long time; you can enjoy their songs and also see how the songs are produced. Chicken mash or ground-up dog food can be used as food, and a wet sponge or piece of cotton will provide adequate moisture.

With a little knowledge of an insect's food habits and habitat requirements, an ingenious student should be able to devise methods of rearing almost any type of insect. Anyone rearing adults from immature stages will sooner or later get parasites instead of the adults expected, and thus will learn something about the habits and hosts of parasitic insects.

The Projection of Living Insects

Living insects can be demonstrated to a group by means of projection, and the effect is much like a motion picture. Aquatic

insects in a watch glass can be projected for small groups with a photographic enlarger or similar projector, or the insects can be put into a slide-sized water cell and projected for larger groups with a slide projector — the more practical method. The construction of such a water cell is illustrated below.

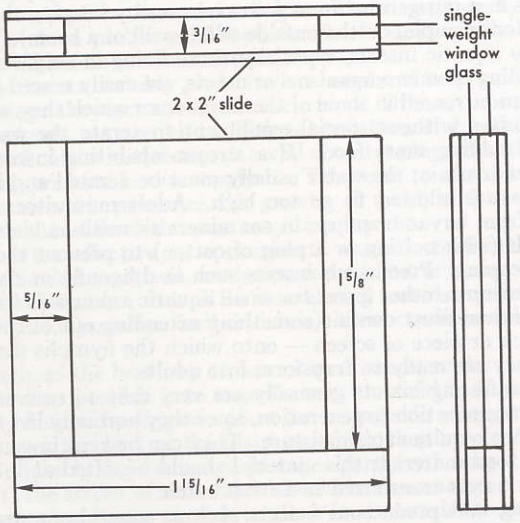

A water cell for projecting small living aquatic animals.

The Structure of Insects

A KNOWLEDGE of insect structure is essential to understanding descriptions and the characters distinguishing different groups. The following account is rather brief; more information is given in the accounts of some of the insect orders.

General Structure. The body of an insect is segmented and more or less elongated. The segments are grouped in 3 body regions, the head, thorax, and abdomen. The *head* bears the eyes, antennae, and mouth parts; the *thorax* bears the legs and wings; the *abdomen* usually bears no locomotor appendages but often has some appendages at its posterior end.

An insect's body wall is somewhat hardened (*sclerotized*). It serves as a shell to protect the internal organs and acts as a skeleton or, more properly, *exoskeleton* (muscles are attached to its inner surface). The surface of the body is divided by intersegmental and other lines into a number of platelike areas, or *sclerites*.

The Head. The head is the anterior capsulelike body region that bears the eyes, antennae, and mouth parts. It is usually quite hard. The surface is divided by sutures into a number of areas, each with a name; the same names are used in different insect groups — where the areas can be homologized — but special terms are used in some groups.

Insects generally have 2 kinds of eyes, simple and compound. For the majority there are 3 simple eyes (*ocelli*), located on the upper front part of the head. Some insects lack ocelli and others have only 2. The *compound eyes* are situated dorsolaterally on the head, each composed of many facets. In some insects they occupy most of the head and contain hundreds of facets.

The Antennae are usually located on the front of the head below the ocelli; they vary greatly in form and in the number of segments contained, and are often used to distinguish different insect groups. Various terms that describe the antennae are explained in the accounts of the groups in which antennal characters are used for identification.

Mouth Parts. The mouth parts of an insect generally are located on the ventral or anterior part of the head, and they vary a great deal in different insect groups. The mouth part structures typically present are a *labrum* (upper lip), a pair of jawlike *mandibles*, a pair of jawlike *maxillae*, a *labium* (lower lip), and a tonguelike structure called the *hypopharynx*.

Insect mouth parts are of 2 general types, chewing and sucking. Insects with chewing mouth parts have laterally moving mandi-